Cavallotto in acciaio inox filettato per tubi
Stainless Steel strap (U-bolt)

art.9440 sim. DIN 3570

dimensioni in mm
Dimensions in mm

Grado A2
Grade A2

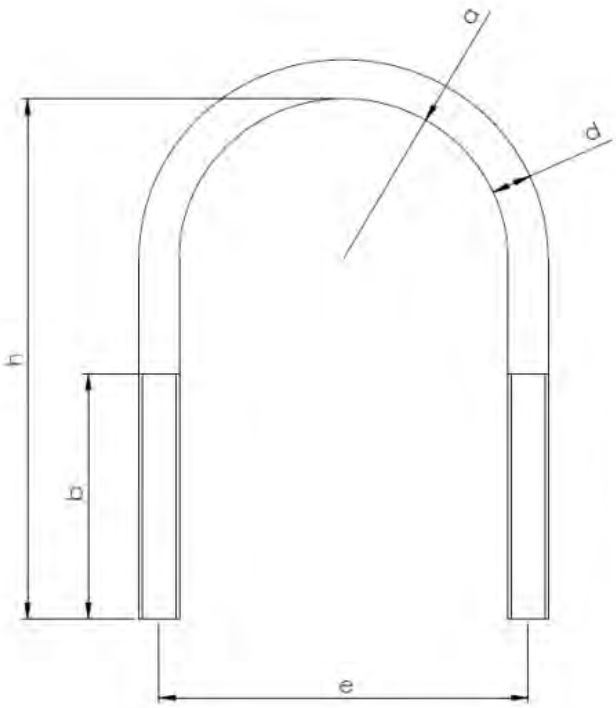

dadi e rondelle sono venduti separatamente
nuts and washers sold separately

Art-Nr.	d		a		h		b		e	
94400803802	7,10		23,0		38,0		20,0		31,0	
	7,07	7,10	22,0	24,0	37,0	39,0	19,0	21,0	30,0	32,0
94400804602	7,10		28,0		46,0		20,0		36,0	
	7,07	7,10	27,0	29,0	45,0	47,0	19,0	21,0	35,00	37,00
94400805002	7,10		35,0		50,0		25,0		43,0	
	7,07	7,10	34,0	36,0	49,0	51,0	24,0	26,0	42,0	44,0
94400806002	7,10		42,0		60,0		30,0		50,0	
	7,07	7,10	41,0	43,0	59,0	61,0	29,0	31,0	49,0	51,0
94400808002	7,10		35,0		80,0		35,0		43,0	
	7,07	7,10	34,0	36,0	79,0	81,0	34,0	36,0	42,0	44,0
94400811002	7,10		65,0		110,0		50,0		73,0	
	7,07	7,10	64,0	66,0	109,0	111,0	49,0	51,0	72,0	74,0
94400812002	7,10		82,0		120,0		50,0		90,0	
	7,07	7,10	81,0	83,0	119,0	121,0	49,0	51,0	89,0	91,0

last edit 11/11/2021
DRAWING N. 1205